Levelling Foot & Base

For Aluminum Profile

Levelling Foot Base for Aluminum Profile

Material	SS41. SUS304
Surfase Processing	Processing ZN, NI, PS (porous)
Application	Lightweight adjustable seat

Part Number	A	M	L1	L2	H	I	T	For Aluminum Profile
ES-LFP 36-06X040	36	M6x1.0	40	55	6	15	2T	30x30
ES-LFP 36-08X040	36	M8x1.25	40	55	6	15	2T	40x40, 40x80

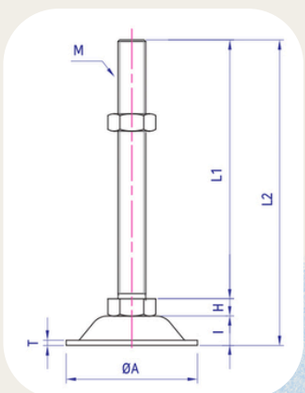

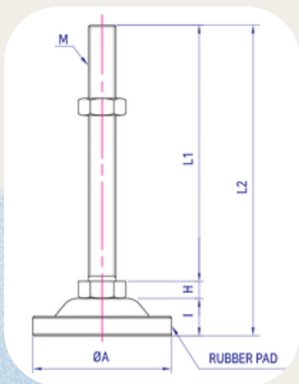

Levelling Foot with Rubber Pad

Material	Bolts, Nuts-SS41. SUS304 / PAD-NBR
Surfase Processing	Zn (white), NI (nickel), PS (porous)
Application	Anti-slip

Part Number	A	M	L1	L2	H	I	For Aluminum Profile
ES-LFPR 6X40-40	40	M6x1.0	40	59	6	13	30x30
ES-LFPR 8X40-40	40	M8x1.25	40	59	6	13	40x40, 40x80

Levelling Foot with Rubber Pad

Material	Steel (standard), Stainless (custom)
Surfase Processing	NI (Nickel), PS (Porous)
Application	Anti-slip adjustable seat

Part Number	A	M	L1	L2	H	I	For Aluminum Profile
ES-LFER 6X40-30	30	M6x1.0	40	61	6	15	30x30, 40x40, 40x80
ES-LFER 8X40-40	30	M8x1.25	40	61	6	15	40x40, 40x80

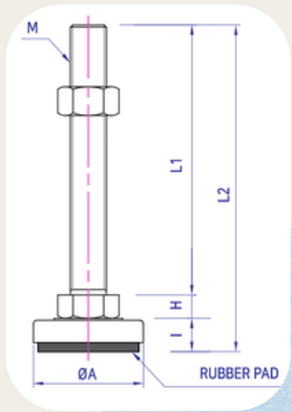

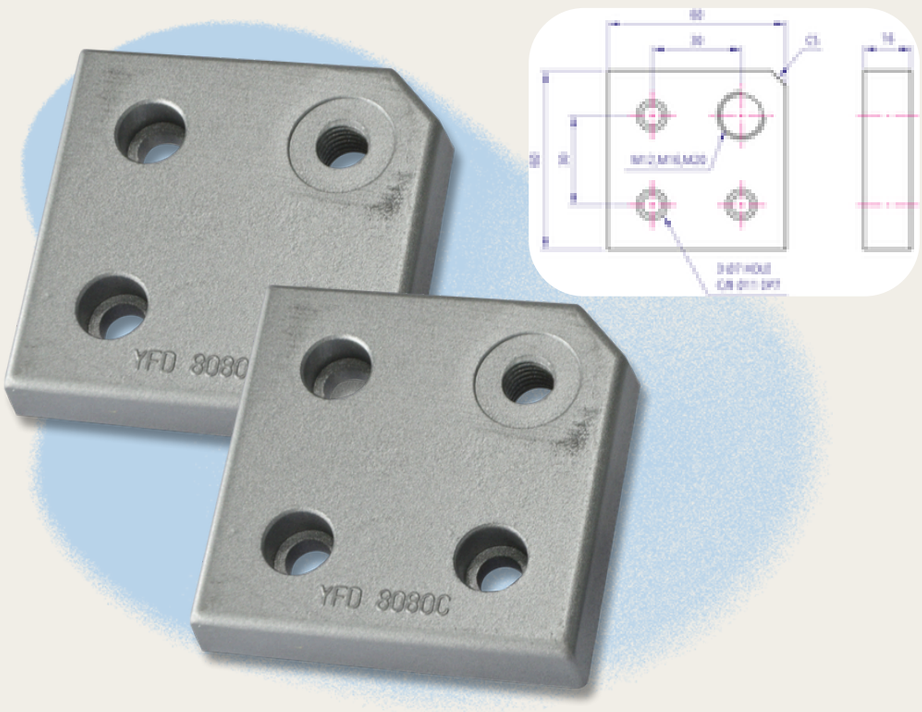

Levelling Foot Base

Product Name	Leveling Foot Base
Part Number	ES-FBD 60X60C
Material	ALDC-12
Surfase Processing	Liquid coating(SILVER)
Application	Can support heavy loads by attaching to the frame section before attaching the leveling foot.

Levelling Foot Base

Product Name	Leveling Foot Base
Part Number	ES-FBD 80X80C
Material	ALDC-12
Surfase Processing	Liquid coating(SILVER)
Application	Can support heavy loads by attaching to the frame section before attaching the leveling foot.

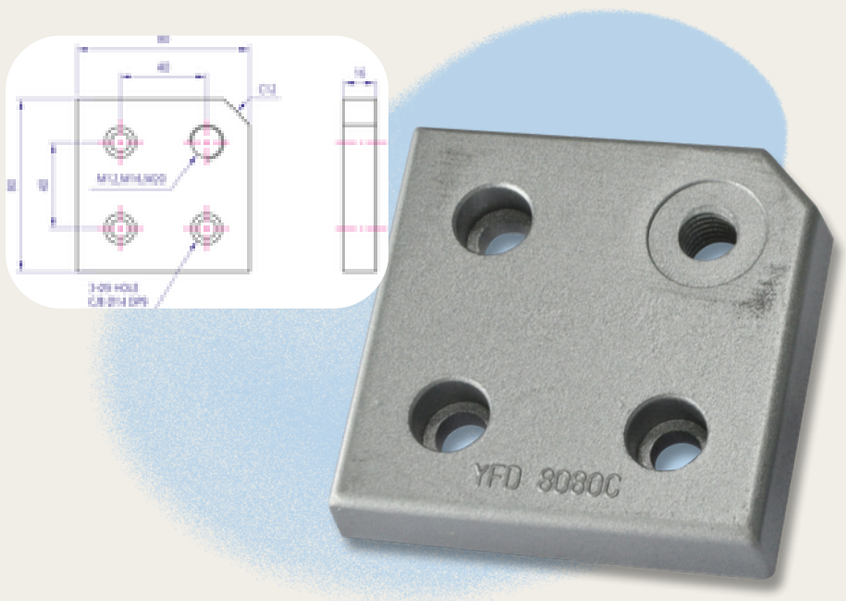

www.esdproductionsystems.com

Tel. (442) 195 4050
Cel. (442) 750 1050

Av. Paseo Monte Miranda #15 Int. 902
Municipio El Marqués, Querétaro
C.P. 76240